

SkyStack™

INSTALLATION MANUAL

Welcome

Congratulations on your purchase of your new Renlita SkyStack Door!

We're here to help:

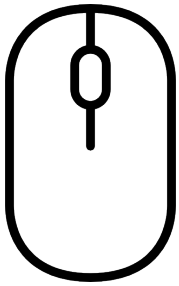

EMAIL SUPPORT
Support@RenlitaDoors.com



PHONE SUPPORT
(903) 486-3301

Table of Contents

Welcome	2
Table of Contents	3
What You Should Know Before You Begin	4
Typical Configuration	5
Process 1 - Preparation	7
Process 2 - Track Installation	8
Process 3 - Installing Panels	9
Process 4 - Installing Driveline	15
Process 5 - Motor Installation and Programming	16
Process 6 - Installing the Seals	17
Process 7 - Installing the Threshold	18

GETTING STARTED

What You Need To Know Before You Begin

- Make sure you obtain and follow the shop drawings in each shipment because they alone specify each door's particular configuration. Do not begin an installation without them.
- Never substitute the hardware and components that Renlita Doors provides. If you need new parts, contact Renlita at the number below.
- Use the appropriate tools, equipment, and personal protective gear to install the door so that you ensure a safe and quality installation.

Parts Included With Your Door

A. Upper roller base bracket

B. Upper roller assembly

C. Upper roller bolts and lock washers

D. Lower roller base bracket

E. Lower roller

F. Link arms

G. Link arm bushing

H. Link arm spacer

I. Flat washers

J. ¼ inch locking nuts

K. ¼ inch lock washers

L. Jamb mounting bolts (based on jamb material in shop drawing)

M. Top and side seal retainers and flap seal

TYPICAL CONFIGURATION

NOTE: YOUR DOOR SIZE AND LAYOUT MAY VARY.
REFER TO YOUR INCLUDED SHOP DRAWINGS FOR THE MOST ACCURATE DEPICTION OF YOUR CUSTOM SKYSTACK™.

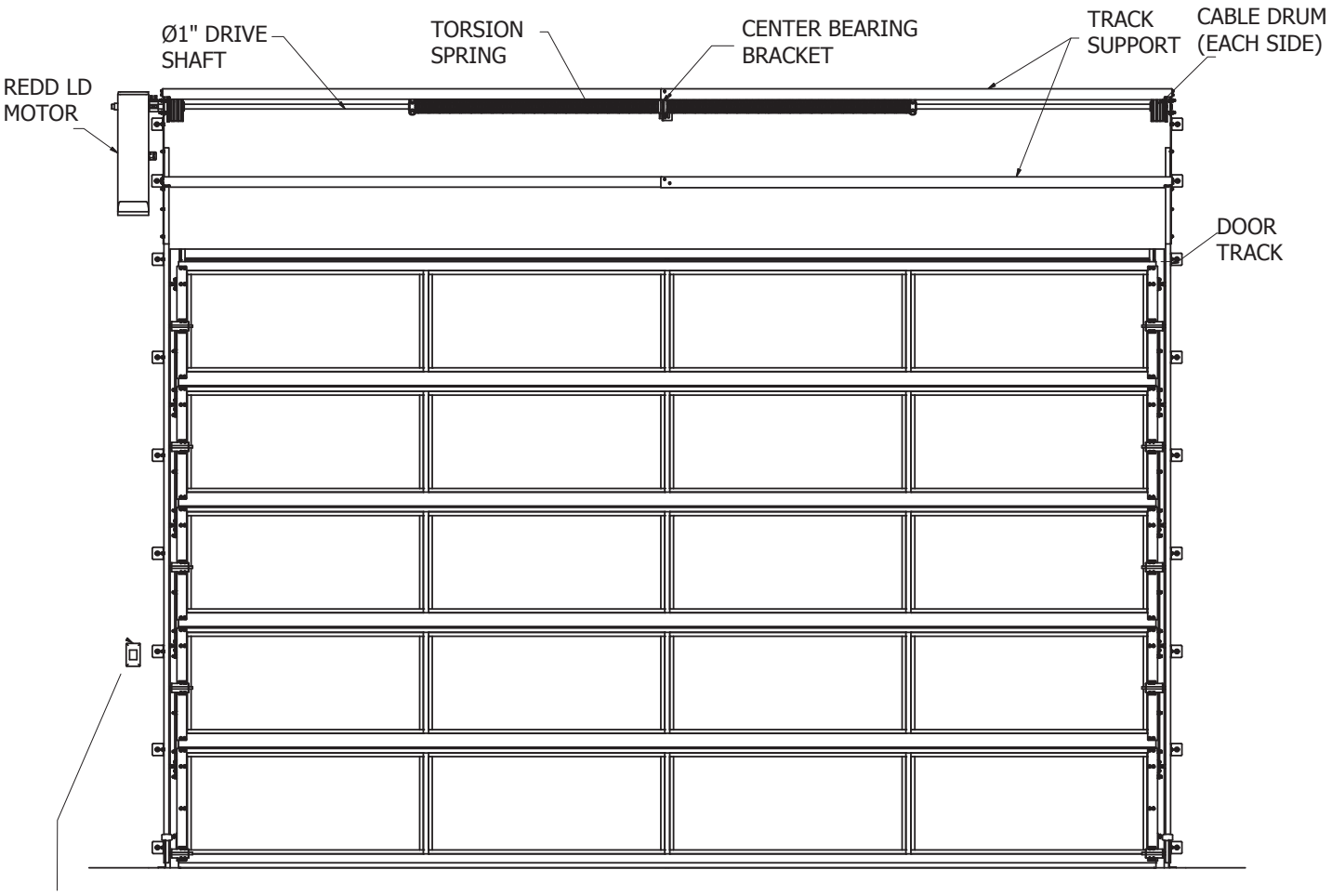

TYPICAL CONFIGURATION

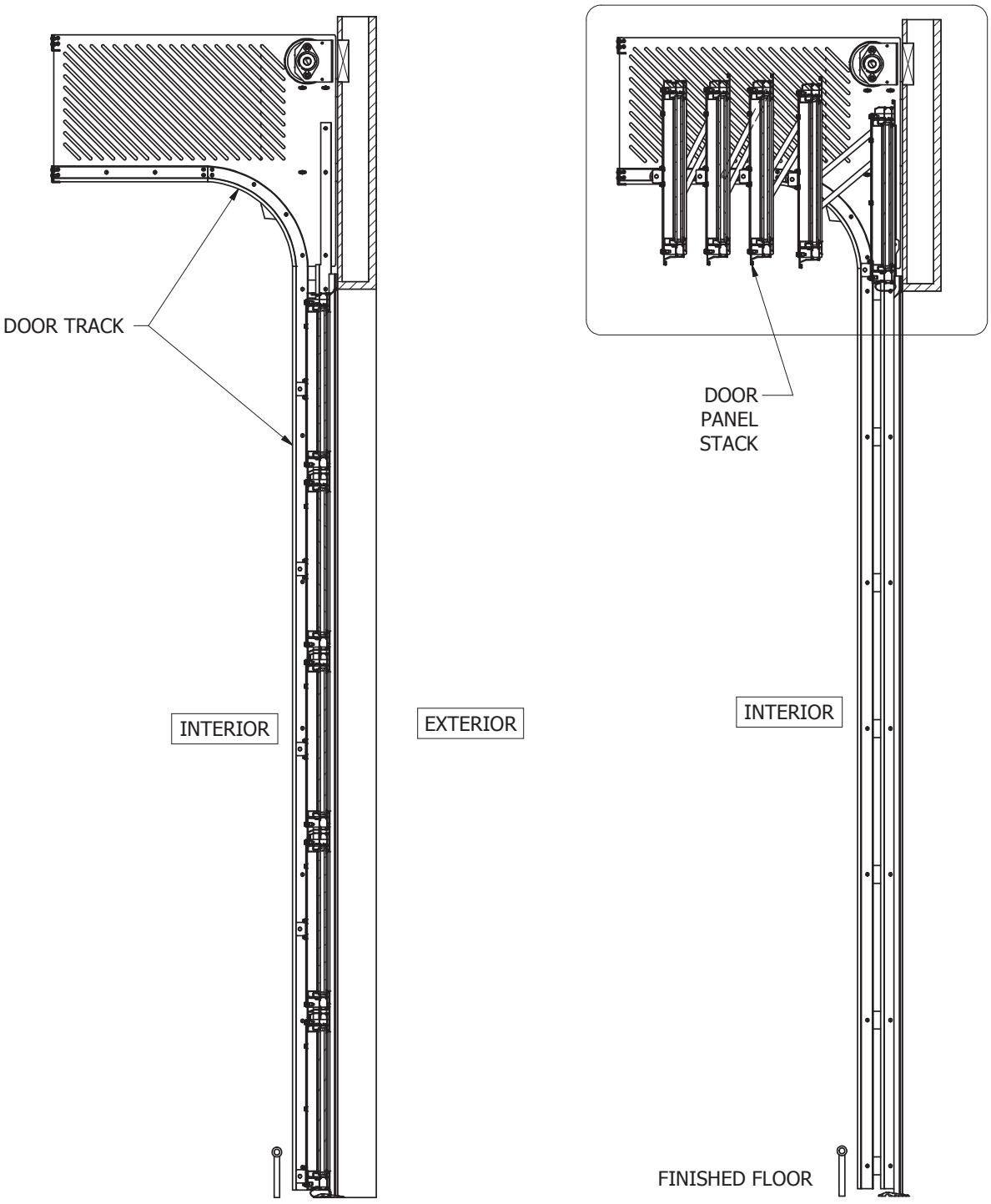

01 DOOR SECTION CLOSED

02 DOOR SECTION OPEN

Process 1 – Preparation

Tools Needed

A. Winding Bars
B. Wrenches – 9/16, 3/8, 7/16
C. Sawhorses (for prepping panels before install)
D. Drill and Impact Driver with bits and socket adapters
E. Laser level
F. Knife or Sheers
G. Shims

Examine the area

A. Compare the shop drawings to the doorway to ensure it has these things:
B. Finished floor height that matches the drawings
C. Space for the door to open and close without hitting the ceiling's furnishings
D. Space in the doorway for the door
E. Space on the doorjambs and at the ceiling for the tracks
F. Doorjambs that are the same material as those in the shop drawings

Set up a work zone

A. No one should run hoses or cords through the doorway because you will need total clearance.
B. Set a safety zone that meets your needs and the safety of others.

Prepare components

A. Examine contents of the crate, use the packing list to ensure you receive all the parts.
B. Contact Renlita immediately if you have any missing or damaged parts.

Process 2 – Track Installation

A. Look at the shop drawings to determine track spacing (inside of track lip to track lip).

B. Stand tracks up to the mounting surface.

C. Use a laser level to ensure tracks are level.

D. Fasten tracks to the wall.

E. Proper fasteners are supplied based on shop drawings.

F. Verify track spacing is correct based on the shop drawings.

G. Verify tracks are square by measuring distance between the back track and front track to ensure that they are the same.

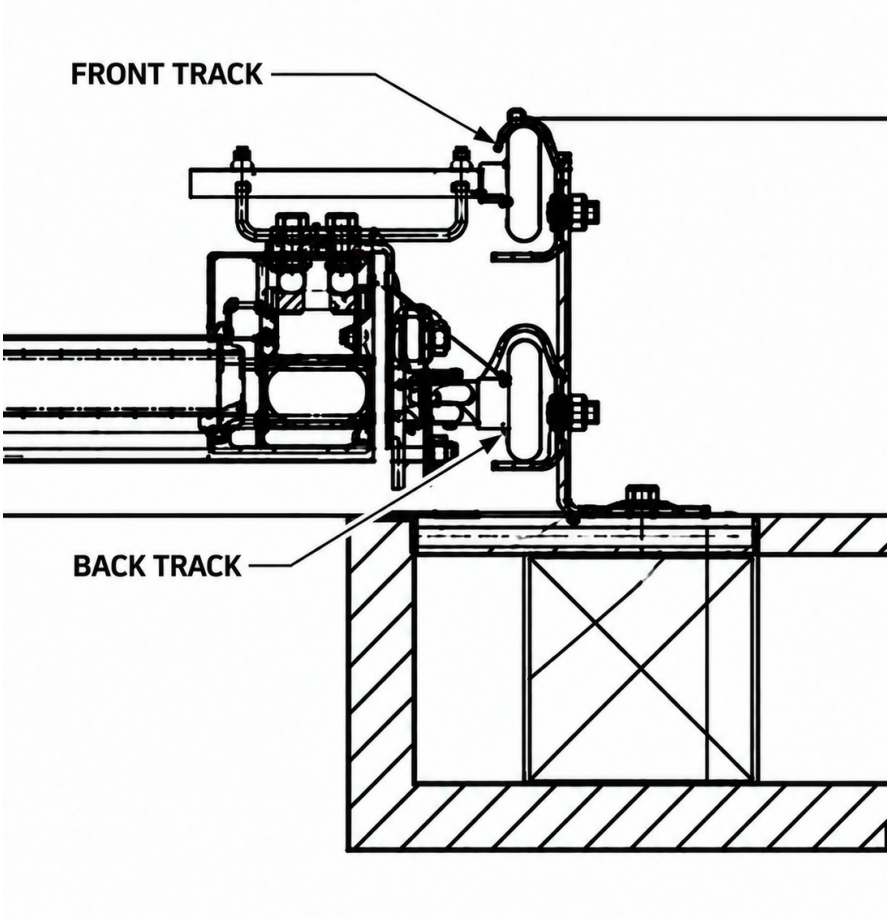

Process 3 – Installing Panels

Bottom Panel

A. Attach the side brackets to the bottom panel with provided bolts and washers.

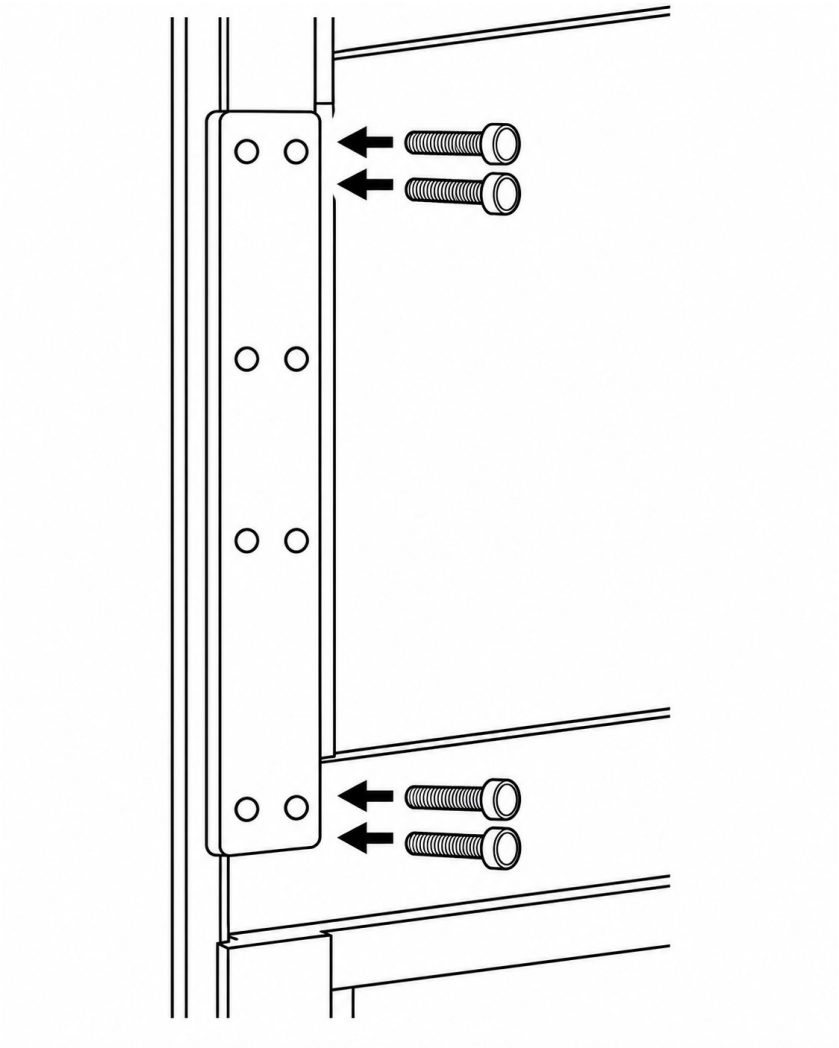

B. Attach cable bracket to the bottom side brackets.

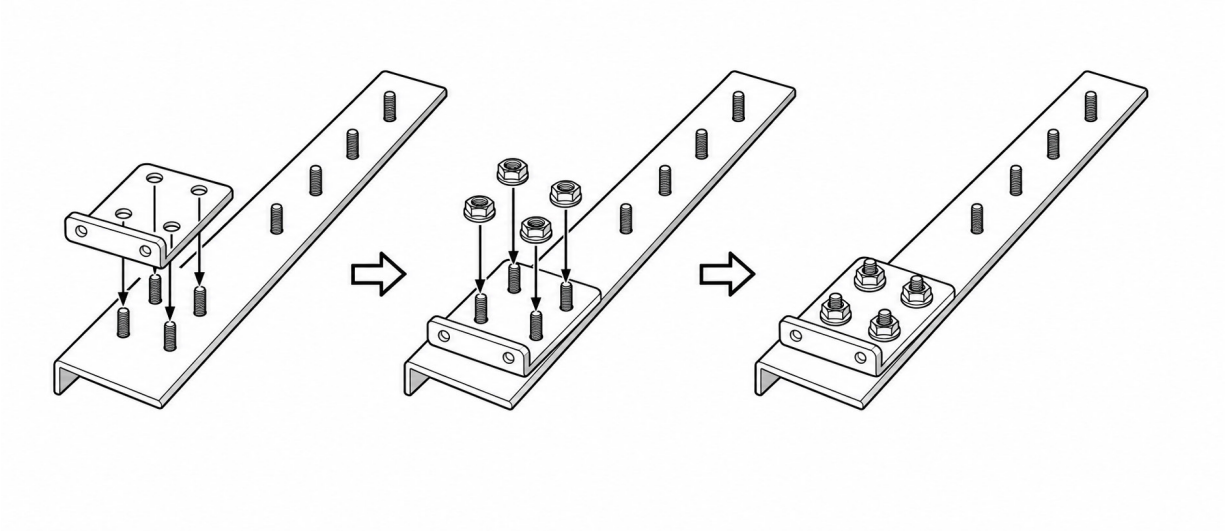

C. Attach cable adjustable I-bolt to cable bracket.

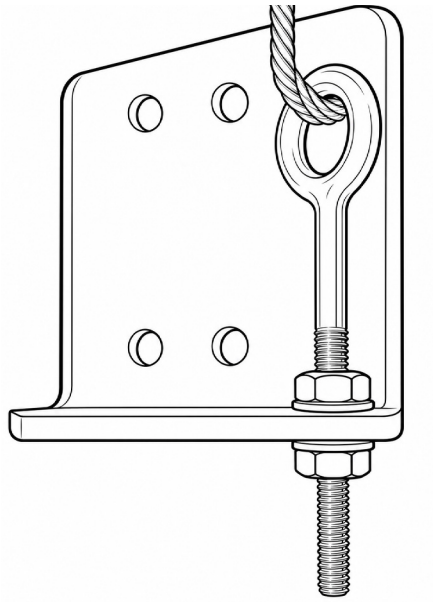

D. Fasten link arms to side brackets and using the provided spacers, bushings and locknuts.

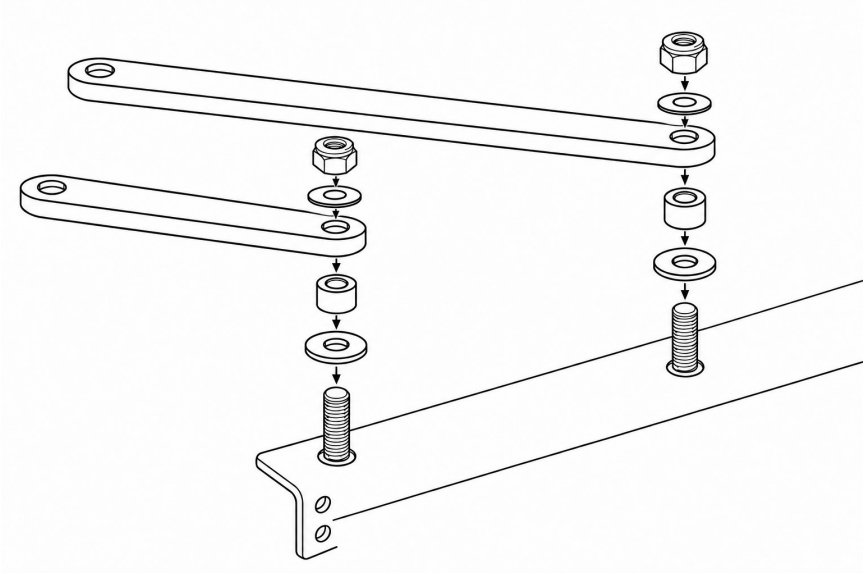

E. Attach the upper roller base brackets.

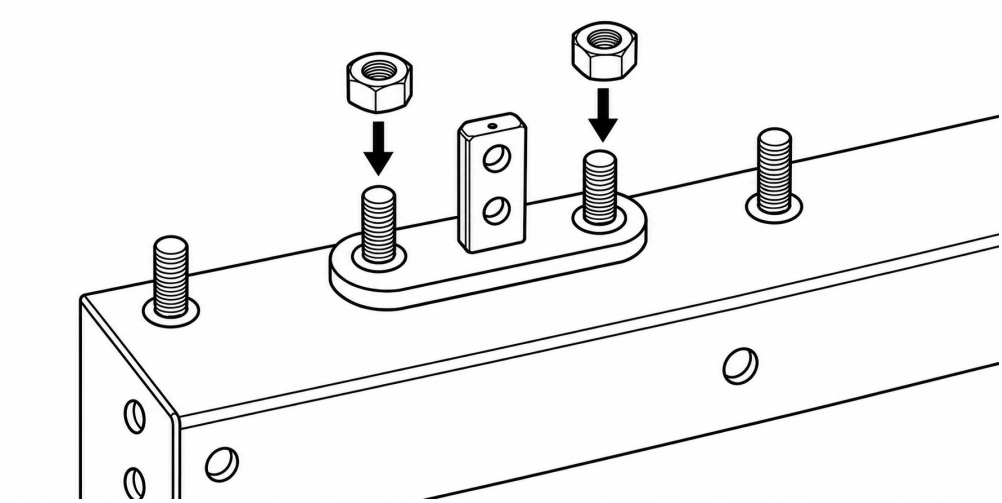

F. Place bottom panel into the opening and center it.

G. Insert the rear roller into the curved track and then attach the lower roller bracket to the door with provided bolts and star washers.

H. Start the bolts in the remainder of the bolt holes on the bracket. Once all the bolts are started, tighten all the bolts.

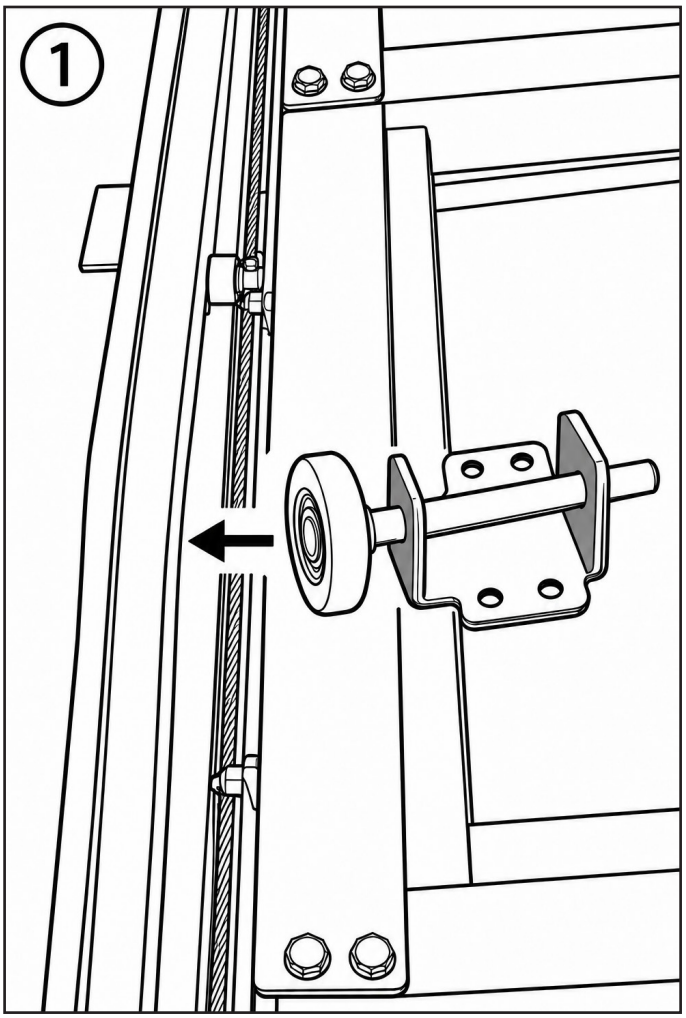

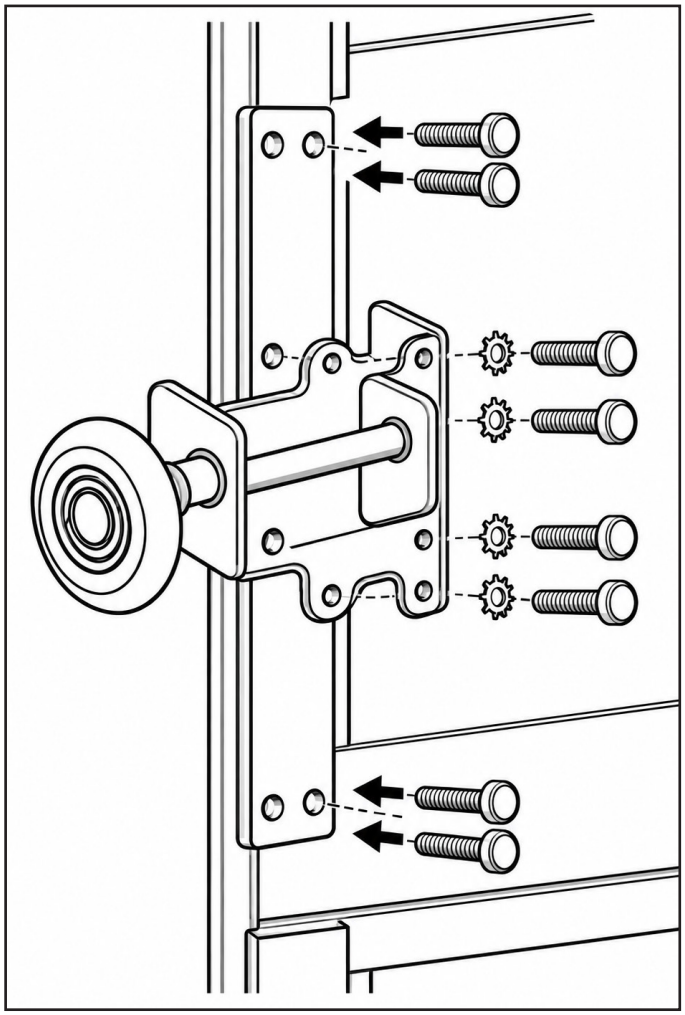

I. Insert upper rollers into track and attach the other portion of the axle to base bracket with provided Allen head screws and lock washers.

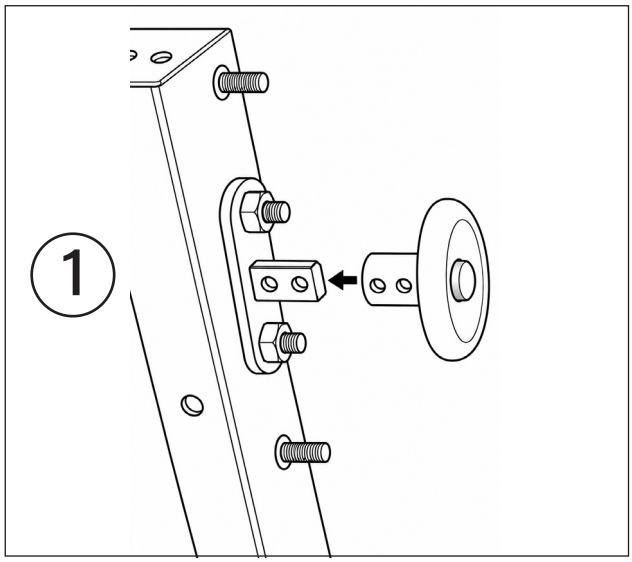

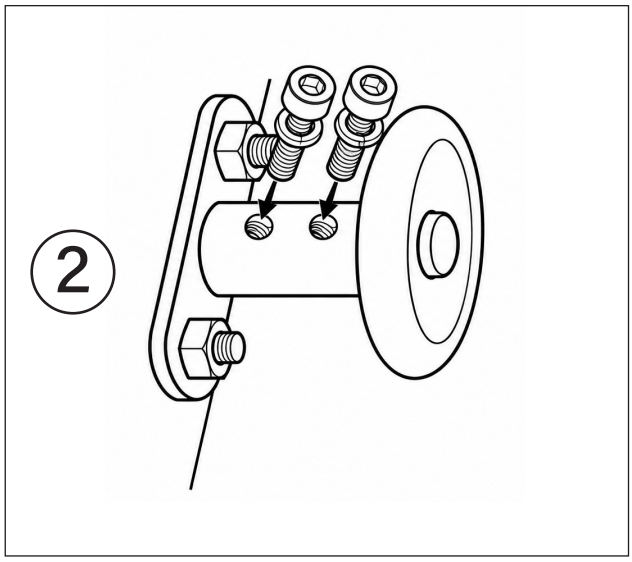

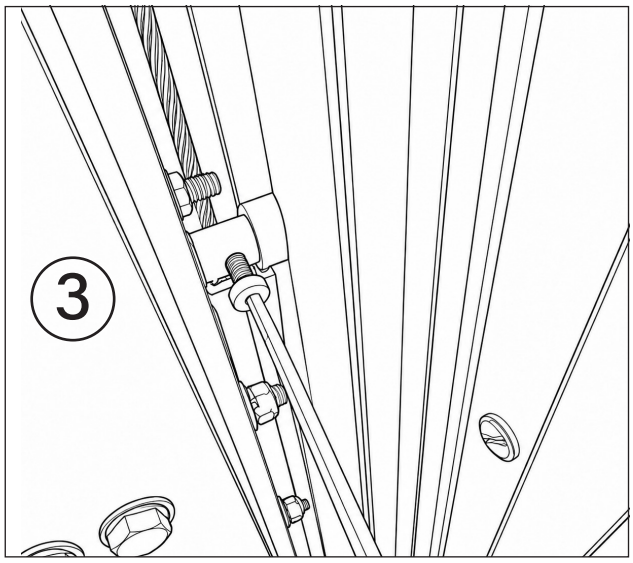

All Remaining Panels

J. Fasten link arms from the lower panel to the bottom link arm attachments on the next panel.

K. Attach the upper link arms to the side panel.

L. Attach the upper roller base brackets.

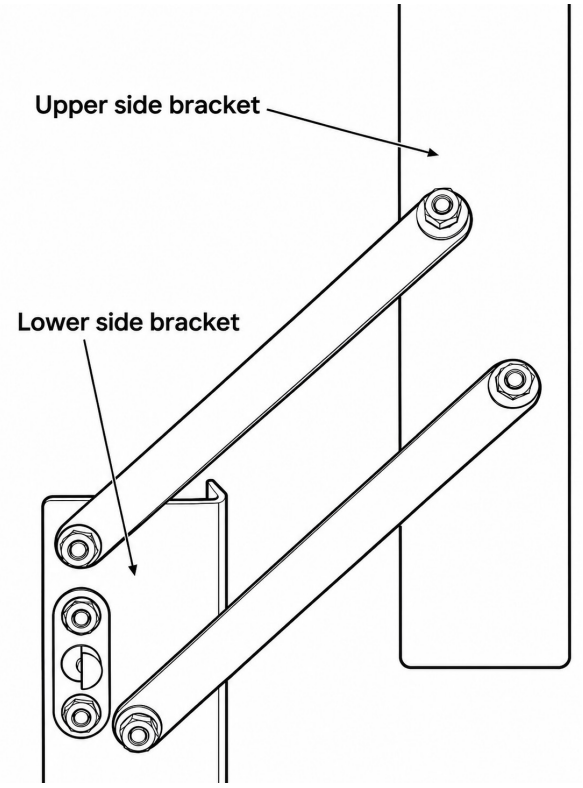

M. Place the panel into the opening on top of the previous panel.

N. Fold the upper bracket up toward the back of the door.

O. Insert the rear roller into the curved track and then attach the lower roller. bracket to the door with provided bolts and star washers.

P. Start the bolts in the remainder of the bolt holes on the bracket. Once all the bolts are started, tighten all the bolts.

Q. Insert upper rollers into track and attach the other portion of the axle to base bracket with provided Allen head screws. The size of the Allen wrench is 9/64.

Process 4 – Installing Driveline

A. Insert the driveshaft through the following items according to the sequence in the illustration:

1. Cable Drums
2. Torsion Springs
3. Center Support Bracket

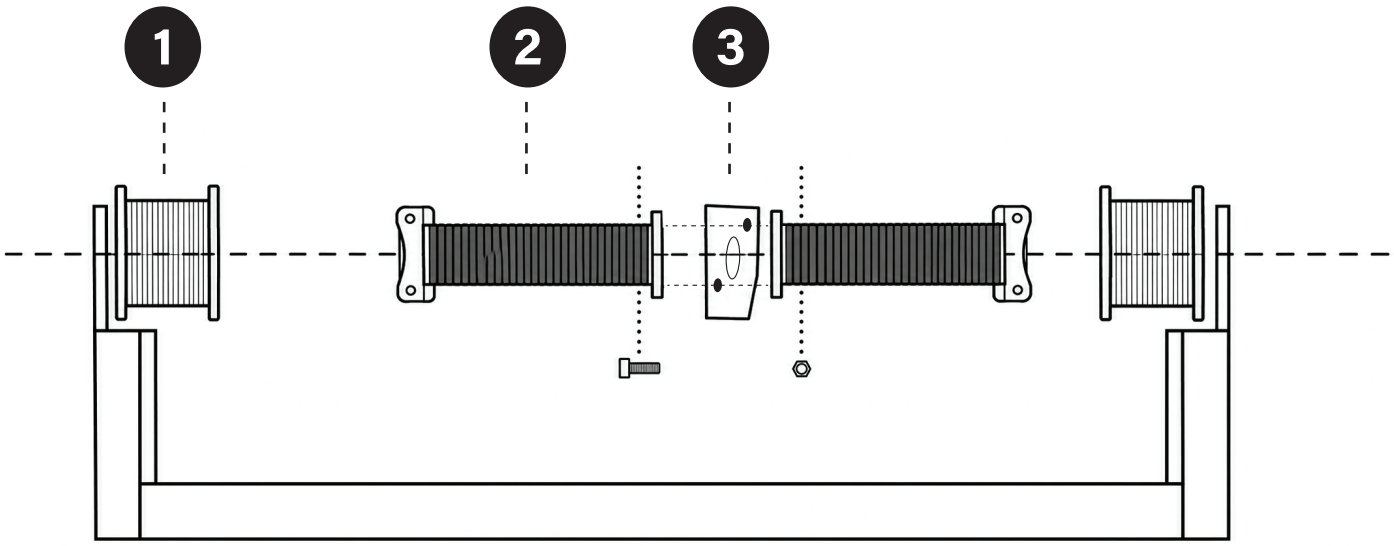

B. The springs and the cable drums will have a mark of red or black to indicate which side to place them. Looking at the door from the interior, place the parts marked with black on the right and the item marked with red on the left.

C. Fasten the center support bracket to the header according to the shop drawing.

D. Secure the spring's stationary cones to the center support bracket with the hardware from the shipment.

E. You will be provided a spring calculation sheet that tells you number of turns per spring.

Process 5 - Motor Installation and Programming

Use motor installation and programming instructions provided in the Motor Manufacturer Manual.

Process 6 - Seal Install

Measure and cut the top and side seal retainers to proper length. Insert provided flap seal. Attach the retainers to the header and jambs.

Top Seal

A. Measure and cut retainer to fit between jambs.

B. Slide the flap seal into the retainer. With the seal flush at the one end crimp the retainer to lock the seal down. Move to the opposite end and pull the seal tight enough to remove the ripples in the seal and crimp the retainer to lock in the seal. this will ensure the seal stays straight.

C. Place each screw approximately 12 inches apart.

D. Fasten the top seal to the lintel with screws appropriate for the header material.

E. There should be 7/8 of an inch from the face of the lintel.

Side Seal

A. Measure and cut retainer to fit between lintel and the ground surface.

B. Slide the flap seal into the retainer. With the seal flush at the one end crimp the retainer to lock the seal down. Move to the opposite end and pull the seal tight enough to remove the ripples in the seal and crimp the retainer to lock in the seal. this will ensure the seal stays straight.

C. Place each screw approximately 12 inches apart.

D. Fasten the side seal to the jamb with screws appropriate for the jamb material.

E. There should be 7/8 of an inch from the face of the jamb.

Process 7 - Threshold Install

A. Measure the opening between the jambs, and cut the threshold 3 inches longer than the opening.

B. Seat the threshold on the outer corners of the doorjambs, and operate the door to make sure the bottom seal and the hump on the threshold make good contact without inhibiting the door's movement.

C. Drill pilot holes in the floor through each of the predrilled holes in the threshold. Move the threshold, and apply a bead of structural adhesive that is 5/16 of an inch thick between the pilot holes where the threshold will lie.

D. Place the threshold in its position and seat the screws.

* NOTE: If you need to splice the threshold, join the pieces where screws will be no more than 8 inches from both sides of the splice.

Operation Instructions

Use operation instructions provided in the Motor Manufacturer Manual.